RoHS Compliant | Customer Drawing

REV.	ECN NO.	DESCRIPTION	DATE	DESIGN

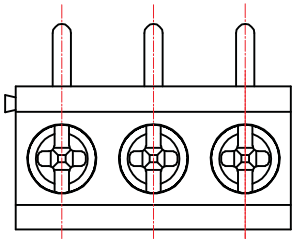

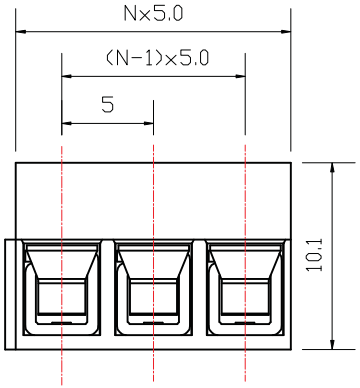

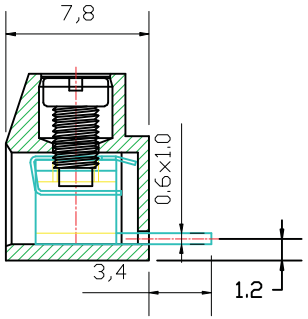

·材质及电镀(Material)
螺丝(Screw):M2.5,钢,镀锌(steel, zinc Plated)
弹片(WireProtector):磷青铜,镀镍或不锈钢
(Phosphor bronze, Ni plated or stainless steel)
焊针(Pin header):黄铜,镀锡(Brass,Tin plated)
塑件(Housing): PA66, UL94V-0

·电气性能(Electrical)
额定电压(Rated Voltage): 300V
额定电流(Rated Current): 10A
接触电阻(Contact Resistance): 20mΩ
绝缘电阻(Insulation Resistance): 5000MΩ/1000V
耐电压(Withstanding Voltage): AC1500V/1Min
使用线径(Wire Range): 26-14AWG 2.5mm²

·机械性能(Mechanical)
温度范围(Temperature Range): -40℃～ +105℃
瞬时温度(MAX Soldering): +250℃, 5秒(5 Seconds)
扭矩(Torque): 0.3Nm(2.7lb.in)
剥线长度(Strip length): 6-7mm

订购方式/HOW TO ORDER

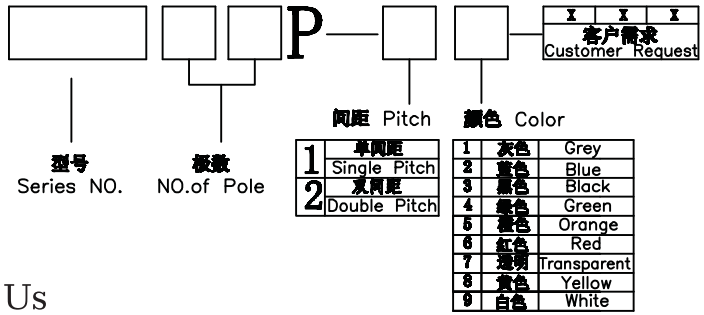

Contact Us

TEL:+86－574－63510149 FAX:+86－574－63516735
E-Mail:Sales@cxsuteng.com Website:www.cxsuteng.com

N=No.of contacts

公差一览表 TOLERANCE UNLESS OTHERWISE			
X.	±0.25	X°.	±5°
.X	±0.20	.X°	±2°
.XX	±0.15	.XX°	±1°
.XXX	±0.02	.XXX°	±0.5°
日期 DATE		2012. 07. 10	

慈溪市速腾电子有限公司
SUTOWN CIXI SUTENG ELECTRONIC CO., LTD

单位 UNITS	mm	制图 DRAWING	No.01	产品名称 TITLE	ST126R—5.0
角法 VIEW		设计 DESIGN	No.06		
比例 SCALE	1:1	审核 CHKD		产品料号 PART NO.	ST126R—5.0
版本 VER	A0	核准 APPD		图号 DRAW NO.	ST126R—5.0